DATAsheet

3P/6-24V PG screw connection (DIN 9680)

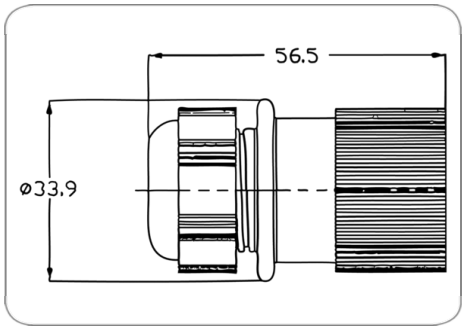

Art.Nr. Part. No.	381744

Product group	Socket, Accessories
Industry	Agriculture
No. of poles	3
Voltage [in V]	6-24
Standard	DIN 9680
For cable diameter	7,00mm - 9,00mm
Suitable for	socket (part no. 381944)